SHEPHERD
MICRO RACING TEAM

VELOX 8.3

NAME	Timo Schröder
DATE	22.05. - 25.05.25
EVENT	ENS Ettlingen Rd 1 2025
TRACK	Ettlingen
AIR TEMP	20
TRACTION	med
BEST LAP	12.9

CASTER 3.0 mm

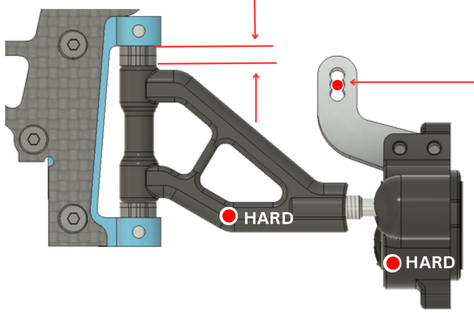

UPRIGHT INSERTS: CENTRIC ○ EXCENTRIC ✔

BUMP STEER 0 mm

FRONT ONEWAY POSITION

	HIGH		✔
BELT	210mm	210mm	207mm
FRONT — REAR			
BELT	210mm	210mm	207mm
		LOW	

ACTIVE ○ SHIM ___ mm

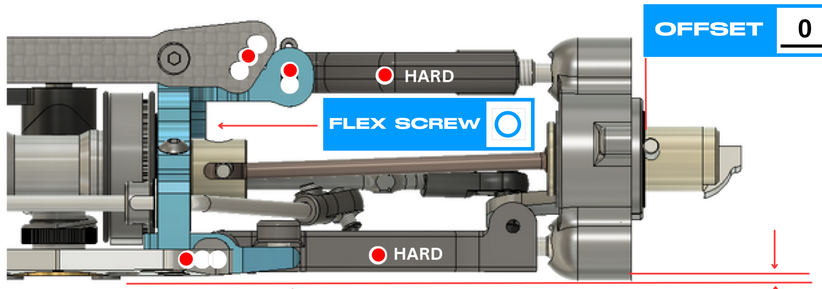

FLEX SCREW ○

OFFSET 0.5 mm

RIDE HEIGHT 7.0 mm

DOWNSTOP 1.0 mm

WHEELBASE: LONG ○ SHORT ✔

TOE IN/OUT 1.0°

CAMBER LEFT 2.2°

WIDTH 252 mm

CAMBER RIGHT 2.2°

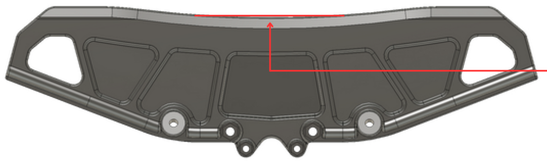

BODY: Blitz TS040

DISTANCE TO BUMPER 19.5 mm

AWS BATTERY TRAY ○

CARBON ✔ BRASS ○ | CARBON ○ BRASS ○ | CARBON ○ BRASS ○

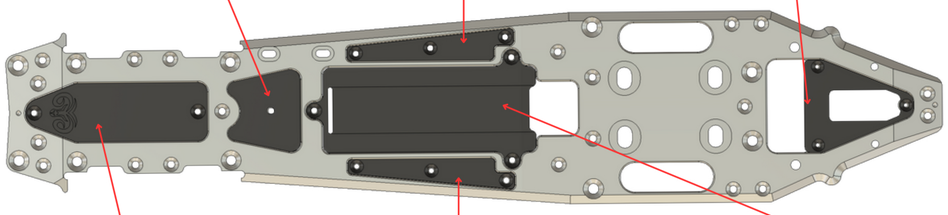

CARBON ○ BRASS ○ | CARBON ○ BRASS ○ | CARBON ✔ BRASS ○

FRONT / REAR

FRONT LEFT	FRONT RIGHT	TYRES	REAR LEFT	REAR RIGHT
		BRAND		
32	32	SHORE	35	35
69	69	DIAMETER	76	76
		ADDITIVE		

SHOCKS

MG white	SPRINGS	MG white
700	OIL	800
std	PISTON	std
1x 1.2	HOLE	2x1.2
std	FP SPRING	std

ANTI-ROLL BAR

FRONT 2.3 mm REAR 2.9 mm

FRONT AXLE

SOLID ☐ SPLIT ☐ 90 DEG ☐ STR ☐

CLUTCH

TYPE	Shepherd
SHOE	Yellow
PRELOAD	1.4
GAP	0.55

GEAR RATIO

1ST 19 / 61 2ND 24 / 57

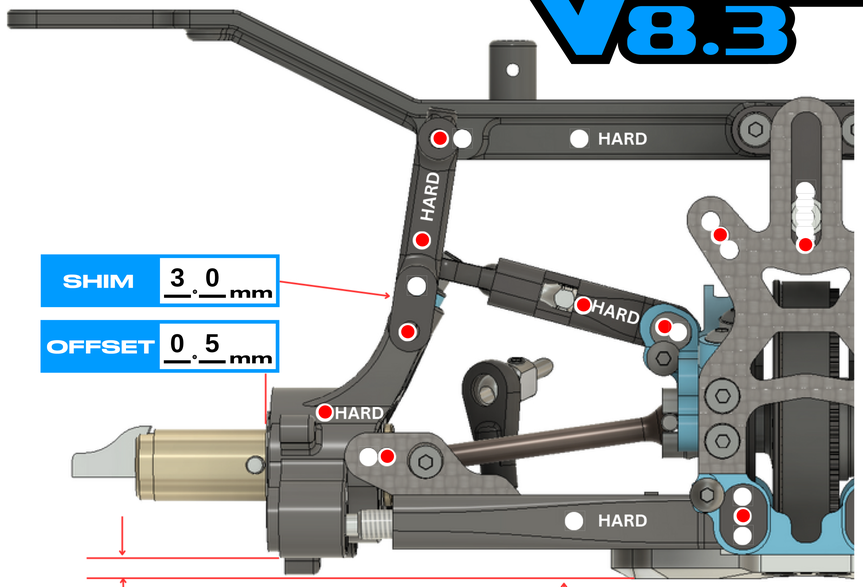

SHIM 3.0 mm

OFFSET 0.5 mm

DOWNSTOP 9.0 mm

RIDE HEIGHT 8.5 mm

CAMBER LEFT 3.0°

TOE IN/OUT 3.0°

CAMBER RIGHT 3.0°

WIDTH 262.0 mm

LONG ○ MEDIUM ✔ SHORT ○

8mm ☐ 9mm ☐ 10mm ●

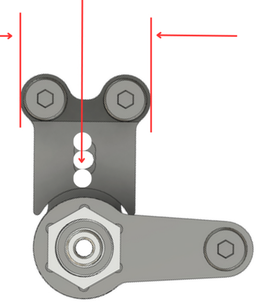

UPRIGHT INSERTS: F ◉ R ○

AERO DISCS: F ✔ R ○

ENGINE	ASM	PIPE	Hipex 2115		
MANIFOLD	Hipex R4	GLOWPLUG	O.S. 7	FUEL	energy

NOTES

- LHO parts
- 25g behind fuel tank
- 25g under rear belt
- leightweight front bumper